BSH.5.13 WITH P, T AND A, B REAR 3/4" BSP, X AND Y CLEARANCE HOLES

BSH	Single plate for piloted valve
5	CETOP 5/NG10
13	3/4" BSP rear connectors
00	No variant
1	Serial No.

Weight: 3,8 Kg

Fixing screws M6x50 UNI 5931

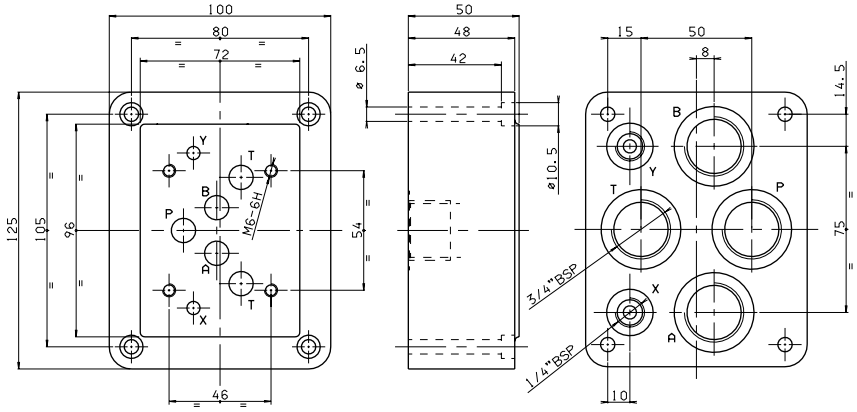

BSH.5.17 WITH P AND T REAR AND A, B SIDE 3/4" BSP, X AND Y CLEARANCE HOLES

BSH	Single plate for piloted valve
5	CETOP 5/NG10
17	3/4" BSP rear and side connectors
00	No variant
1	Serial No.

Weight: 3,9 Kg

Fixing screws M6x50 UNI 5931

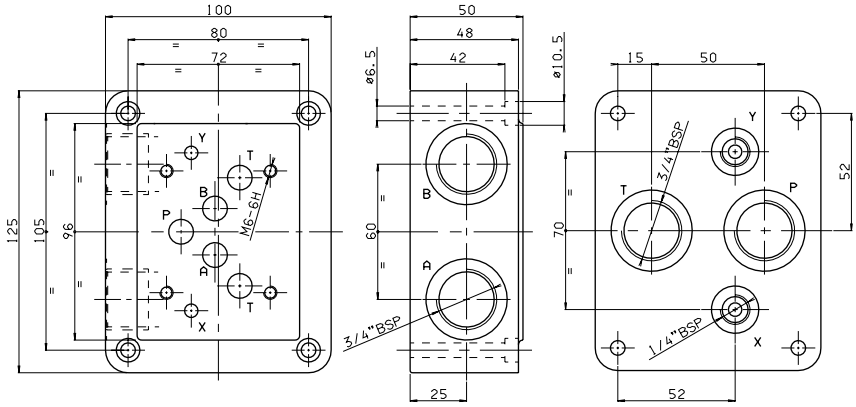

BSH.5.31 WITH P AND T REAR, A AND B SIDE 3/4" BSP, X AND Y CLEARANCE HOLES WITH MAXIMUM PRESSURE VALVE

BSH	Single plate for piloted valve
5	CETOP 5/NG10
31	3/4" BSP rear and side connectors
*	**M** = Plastic knob **C** = Grub screw
*	Setting ranges **1** = Max 50 bar **2** = Max 140 bar **3** = Max 320 bar
* *	**00** = No variant **V1** = Viton
2	Serial No.

Weight: 5,5 Kg

Fixing screws M6x75 UNI 5931

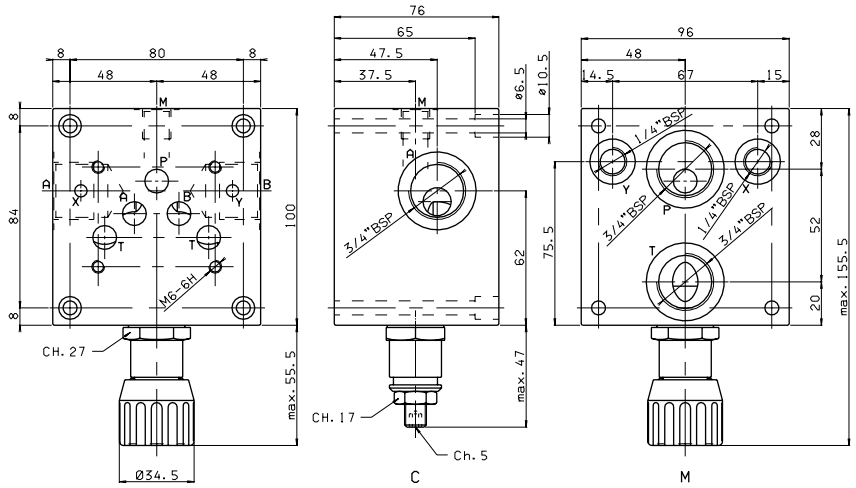

• For the minimum permissible setting pressure depending on the spring, see minimum setting curve pressure CMP30